A simple joystick adapter

It cannot be said often enough: "An analog computer is thing of beauty and a joy forever."[1] And an analog computer is a wonderful toy for those mathematically inclined, but what would be a toy without a joystick? This short application note shows a simple adapter circuit which allows to use a two-channel analog joystick as commonly used in model building with an analog computer.

The joystick used in the following is a two-channel joystick from an old model remote control. It consists of two 4k7 ($4700\ \Omega$) potentiometers – one for the x- and one for the y-direction. A simple handheld enclosure for this has been built as shown on the left in figure 2. This also holds a push button which can be used to control an electronic switch or a comparator in the analog computer.

The circuit shown in figure 1 is pretty straighforward: First, the two reference voltages of ± 10 V are buffered by the operational amplifiers `IC1A` and `IC1B`. `R1` and `R2` are the joystick's potentiometers while `R1*` and `R2*` are used to set the origin of the joystick (putting the joystick into its middle position with respect to x and y should yield a value of 0 on each channel).

Since the potentiometers in a typical remote control joystick allow for a 270 degree travel while the joystick only allows for a much smaller deflection, the wipers will never hit their respective end positions. Accordingly, the output signals x and y must be amplified to satisfy $10\ \text{V} \leq x, y \leq +10$ V. This is done by the two operational amplifiers `IC1C` and

[1] John H. McLeod, Suzette McLeod, "The Simulation Council Newsletter", in *Instruments and Automation*, Vol. 31, March 1958, S. 488.

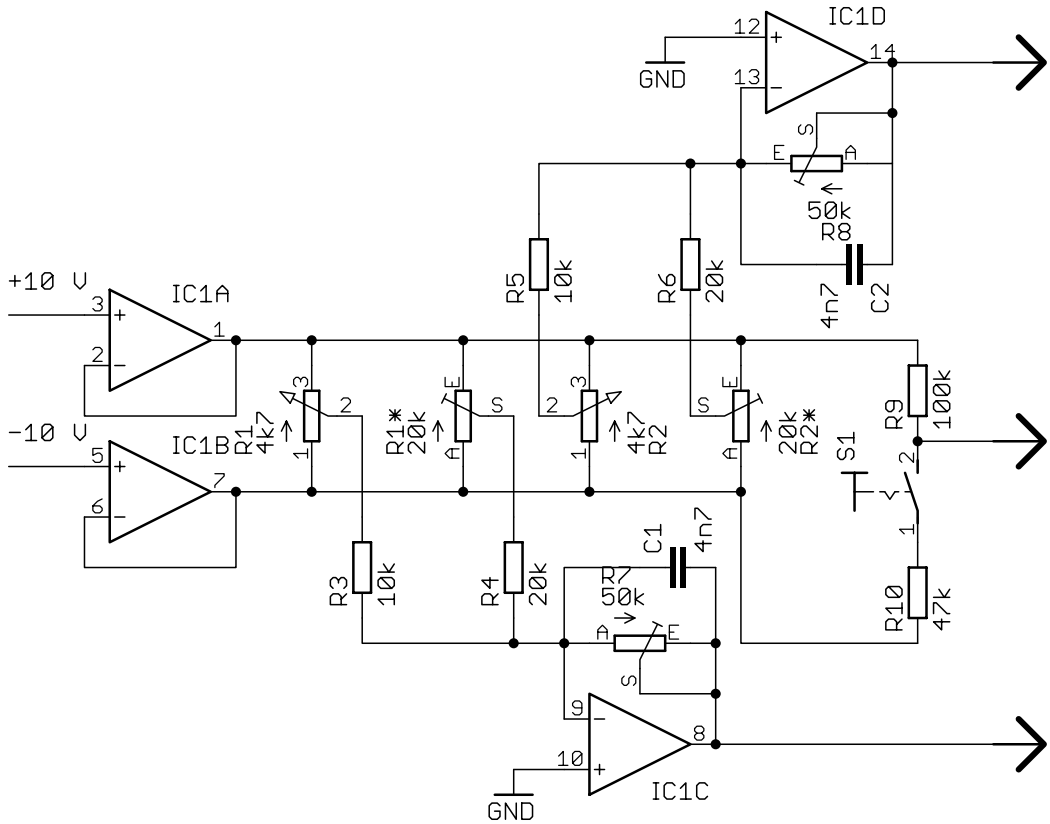

Figure 1: Joystick adapter circuit

IC1D. The capacitors C1 and C2 suppress unwanted oscillations and smooth the output signal a bit. The slight non-linearity due to the load resistance of 10 k on the wipers of the joystick potentiometers is negligible in this application, so no additional buffer stage is required.

The switch S1 which is also mounted in the joystick's enclosure can be seen on the right side of the schematic. As long as it is open, the output is tied to $+10$ V by means of a 100k resistor. Closing the switch

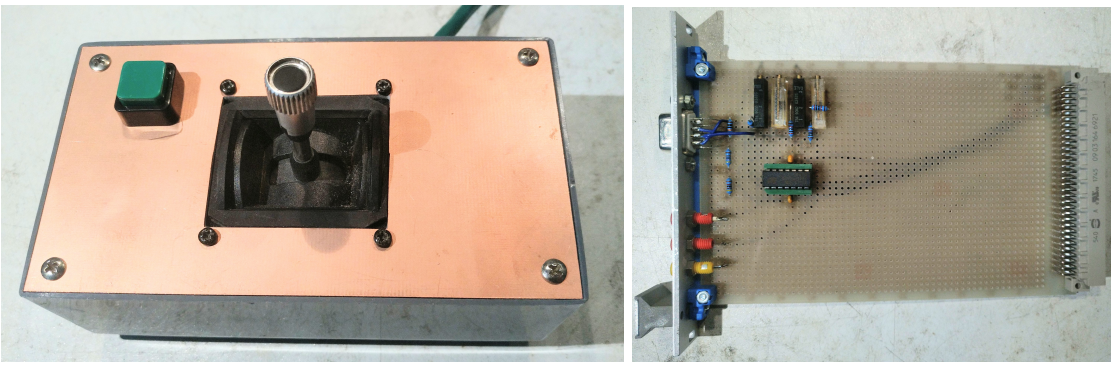

Figure 2: Joystick mounted in enclosure and prototype adapter circuit

will yield a negative value so that either a comparator or an electronic switch (in the case of an Analog Paradigm Model-1 analog computer) can be controlled by this switch.

The right half of figure 2 shows the prototype circuit built on a standard 160×100 mm^2 breadboard. The joystick is plugged into the 9-pin SUB-D connector visible on the upper left of the circuit board. The 2 mm sockets yield the output signals – the red sockets yield x and y while the yellow socket yields the signal from the push button switch.

Happy analog computing!